REILLY ARCHITECTURAL

RWD45 WOOD LIFT & SLIDE DOOR (HVHZ)(IMPACT)

INSTALLATION NOTES:

1. ONE (1) INSTALLATION ANCHOR IS REQUIRED AT EACH ANCHOR LOCATION SHOWN OR OTHERWISE INDICATED.
2. THE NUMBER OF INSTALLATION ANCHORS DEPICTED IS THE MINIMUM NUMBER OF ANCHORS TO BE USED FOR PRODUCT INSTALLATION OF THE MAXIMUM SIZE LISTED.
3. INSTALL INDIVIDUAL INSTALLATION ANCHORS WITHIN A TOLERANCE OF ±1/2 INCH THE DEPICTED LOCATION & SPACING IN THE ANCHOR LAYOUT DETAILS (I.E., WITHOUT CONSIDERATION OF TOLERANCES). TOLERANCES ARE NOT CUMULATIVE FROM ONE INSTALLATION ANCHOR TO THE NEXT.
4. SHIM AS REQUIRED AT EACH INSTALLATION ANCHOR WITH LOAD BEARING SHIM(S). MAXIMUM ALLOWABLE SHIM STACK TO BE 1/2″ FOR HEAD AND JAMB. MAXIMUM ALLOWABLE SHIM STACK TO BE 1" FOR SILL. SHIM WHERE SPACE OF 1/16" OR GREATER OCCURS. SHIM(S) SHALL BE CONSTRUCTED OF HIGH DENSITY PLASTIC OR BETTER.
5. FOR MASONRY OR CONCRETE OPENINGS, 1X WOOD BUCK MAY BE USED (OPTIONAL AS LONG AS THE MINIMUM EMBEDMENT AND EDGE DISTANCE REQUIREMENTS ARE STILL MET WITHIN THE CORRESPONDING HOST SUBSTRATE. SEE GENERAL NOTE #3 ON SHEET 1 FOR MORE INFORMATION.
6. MINIMUM EMBEDMENT AND EDGE DISTANCE EXCLUDE WALL FINISHES, INCLUDING BUT NOT LIMITED TO STUCCO, FOAM, BRICK VENEER, AND SIDING.
7. INSTALLATION ANCHORS AND ASSOCIATED HARDWARE MUST BE MADE OF CORROSION RESISTANT MATERIAL OR HAVE A CORROSION RESISTANT COATING.
8. FOR HOLLOW BLOCK AND GROUT FILLED BLOCK, DO NOT INSTALL INSTALLATION ANCHORS INTO MORTAR JOINTS. EDGE DISTANCE IS MEASURED FROM FREE EDGE OF BLOCK OR EDGE OF MORTAR JOINT INTO FACE SHELL OF BLOCK.
9. INSTALLATION ANCHORS SHALL BE INSTALLED IN ACCORDANCE WITH ANCHOR MANUFACTURER'S INSTALLATION INSTRUCTIONS, AND ANCHORS SHALL NOT BE USED IN SUBSTRATES WITH STRENGTHS LESS THAN THE MINIMUM STRENGTH SPECIFIED BY THE ANCHOR MANUFACTURER.

GENERAL NOTES:

1. THE PRODUCT SHOWN HEREIN IS DESIGNED AND MANUFACTURED TO COMPLY WITH THE CURRENT EDITION FLORIDA BUILDING CODE (FBC), **INCLUDING** HVHZ AND HAS BEEN EVALUATED ACCORDING TO THE FOLLOWING:
   - TAS 201-94
   - TAS 202-94
   - TAS 203-94
2. ADEQUACY OF THE EXISTING STRUCTURAL CONCRETE/MASONRY, 2X FRAMING, AND METAL FRAMING AS A MAIN WIND FORCE RESISTING SYSTEM CAPABLE OF WITHSTANDING AND TRANSFERRING APPLIED PRODUCT LOADS TO THE FOUNDATION IS THE RESPONSIBILITY OF THE ENGINEER OR ARCHITECT OF RECORD FOR THE PROJECT OF INSTALLATION.
3. 1X AND 2X BUCKS (WHEN USED) SHALL BE DESIGNED AND ANCHORED TO PROPERLY TRANSFER ALL LOADS TO THE STRUCTURE. BUCK DESIGN AND INSTALLATION IS THE RESPONSIBILITY OF THE ENGINEER OR ARCHITECT OF RECORD FOR THE PROJECT OF INSTALLATION.
4. THE INSTALLATION DETAILS DESCRIBED HEREIN ARE GENERIC AND MAY NOT REFLECT ACTUAL CONDITIONS FOR A SPECIFIC SITE. IF SITE CONDITIONS CAUSE INSTALLATION TO DEVIATE FROM THE REQUIREMENTS DETAILED HEREIN, A LICENSED ENGINEER OR ARCHITECT SHALL PREPARE SITE SPECIFIC DOCUMENTS FOR USE WITH THIS DOCUMENT, IN NON-HVHZ AND TO BE REVIEWED BY BUILDING OFFICIAL. FOR HVHZ DEVIATION FROM APPROVAL REQUIRES ONE TIME APPROVAL FROM MIAMI-DADE COUNTY (RER).
5. APPROVED IMPACT PROTECTIVE SYSTEM **IS NOT REQUIRED** ON THIS PRODUCT IN AREAS REQUIRING IMPACT RESISTANCE.
6. DOOR MATERIAL: MAHOGANY/ ALUMINUM
7. GLASS MEETS THE REQUIREMENTS OF ASTM E1300 GLASS CHARTS. SEE SHEET 2 FOR GLAZING DETAILS.

TABLE OF CONTENTS

SHEET	SHEET DESCRIPTION
1	GENERAL NOTES & INSTALLATION NOTES
2	GLAZING DETAILS & DESIGN PRESSURE TABLE
3	ELEVATION 2 - TRACK
4	ELEVATION 3 - TRACK
5	ANCHOR LAYOUT
6	ANCHOR LAYOUT
7	VERTICAL SECTIONS
8	VERTICAL SECTIONS
9	HORIZONTAL SECTIONS
10	ANCHOR DETAILS
11	ANCHOR DETAILS & ANCHOR SCHEDULE
12	COMPONENTS AND BILL OF MATERIALS
13	COMPONENTS CONTINUED

MAX. PANEL SIZE		CONFIG.	DESIGN PRESSURE	MISSILE IMPACT RATING
WIDTH	HEIGHT			
SEE SHEET 2		SEE SHEET 3 & 4	+/- 60 PSF AT TESTED SIZE, SEE SHEET 2 FOR ALTERNATE SIZES AND PRESSURES	LARGE & SMALL MISSILE IMPACT

Digitally signed by Hermes F. Norero, P.E.
Reason: I am approving this document
Date: 2024.02.20 12:14:14 -05'00'

REILLY ARCHITECTURAL
901 BURMAN BLVD. BUILDING 701
CALVERTON, NEW YORK 11933
PH: (631)208-0710 FAX: (631)201-0711

TITLE: *RWD45 WOOD LIFT & SLIDE DOOR (HVHZ) (IMPACT)*

GENERAL NOTES & INSTALLATION NOTES

PREPARED BY: BUILDING DROPS, INC.
1900 NE MIAMI CT. SUITE 2-15
MIAMI, FL 33132
PH: (954)399-8478
FAX: (954)744.4738
WEB: www.buildingdrops.com

REMARKS	BY	DATE
FRAME SIZE NOTE	SM	2/20/24

THE INSTALLATION DETAILS DESCRIBED HEREIN ARE GENERIC AND MAY NOT REFLECT ACTUAL CONDITIONS FOR A SPECIFIC SITE. IF SITE CONDITIONS CAUSE INSTALLATION TO DEVIATE FROM THE REQUIREMENTS DETAILED HEREIN, A LICENSED ENGINEER OR ARCHITECT SHALL PREPARE SITE SPECIFIC DOCUMENTS FOR USE WITH THIS DOCUMENT.

HERMES F. NORERO LICENSE No. 73778 STATE OF FLORIDA PROFESSIONAL ENGINEER

HERMES F. NORERO, P.E.
LICENSE NO. 73778
1900 NE MIAMI CT. SUITE 2-15
MIAMI, FL 33132
FBPE CERT. OF AUTHORIZATION NO. 29578

FL46083

DATE: 09.26.2023

DWG. BY: MG

CHK. BY: HFN

SCALE: NTS

DWG. #: RWD007

SHEET: 1 OF 13

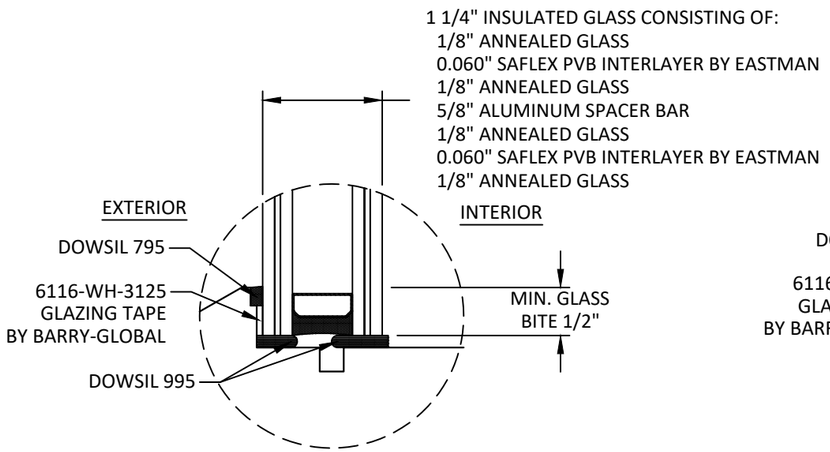

GLAZING DETAIL 1

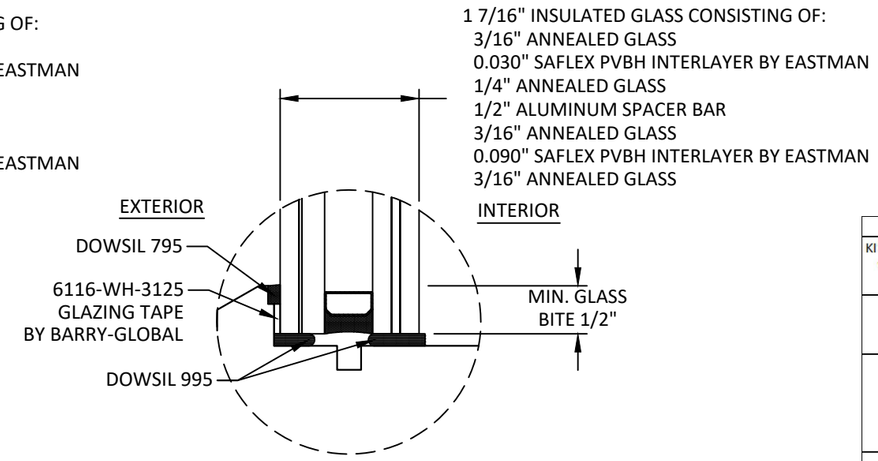

GLAZING DETAIL 2

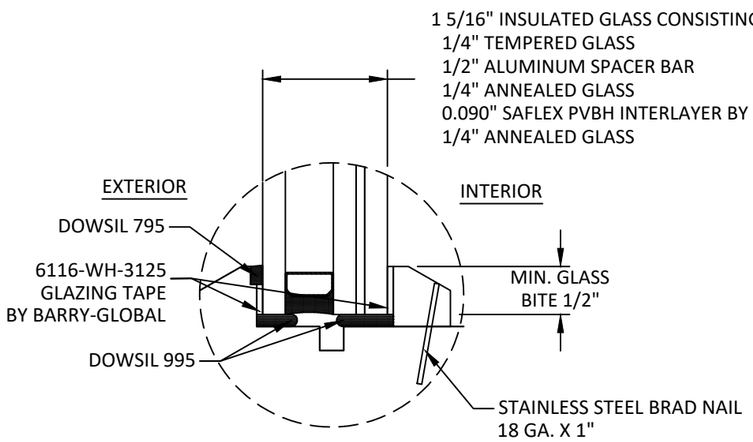

GLAZING DETAIL 3

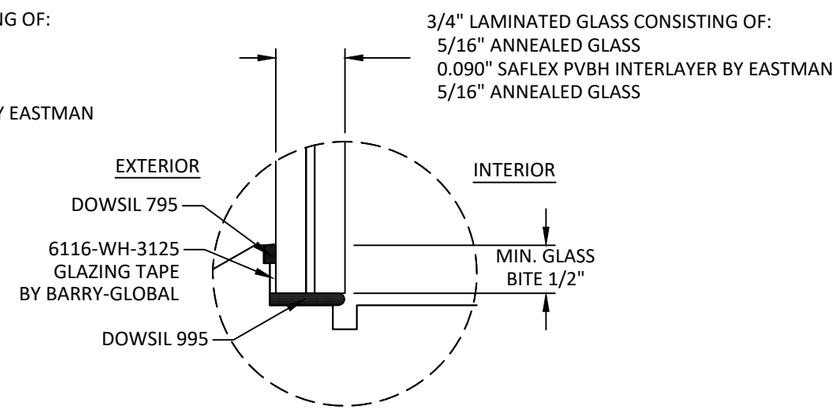

GLAZING DETAIL 4

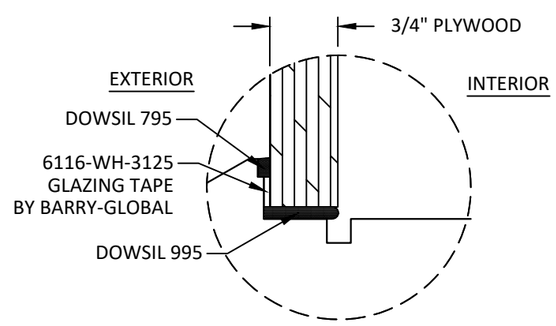

KICK PANEL DETAIL

DESIGN LOAD CAPACITY - PSF		
KICKPANEL WIDTH (IN)	KICKPANEL HEIGHT (IN)	KICKPANEL EXT. (+) INT. (-)
24	12 - 30	60.0
	36	50.8
	42	43.6
30	12 - 30	60.0
	36	50.8
	42	43.6
	48	38.1
	54	33.9
36	12 - 30	60.0
	36	50.8
	42	43.6
	48	38.1
42	12 - 30	60.0
	36	50.8
	42	43.6
48	12 - 30	60.0
	36	50.8
54	12 - 30	60.0
60	12 - 30	60.0

DESIGN LOAD CAPACITY - PSF			
PANEL WIDTH (IN)	PANEL HEIGHT (IN)	G1 GLAZING EXT. (+) INT. (-)	G2, G3 OR G4 GLAZING EXT. (+) INT. (-)
24 - 60	84	60.0	60.0
66		54.5	54.5
72		-	50.0
78		-	46.2
84		-	42.9
87		-	41.4
24 - 60	90	60.0	60.0
66		-	54.5
72		-	50.0
78		-	46.2
81		-	44.4
24 - 54	96	60.0	60.0
60		-	60.0
66		-	54.5
72		-	50.0
75		-	48.0
24 - 54	102	60.0	60.0
60		-	60.0
66		-	54.5
69		-	52.2
24 - 48	108	60.0	60.0
54		-	60.0
60		-	60.0
66		-	54.5
24 - 48	114	60.0	60.0
54		-	60.0
60		-	60.0
63		-	57.1
24 - 42	120	60.0	60.0
48		-	60.0
54		-	60.0
60		-	60.0

GLAZING NOTES:

1. GLASS TYPE COMPLIES WITH ASTM E1300 REQUIREMENTS AS WELL AS APPLICABLE SAFETY GLAZING REQUIREMENTS PER THE FBC. TEMPER AND SAFETY GLAZING REQUIREMENTS SHALL BE REVIEWED ON A SITE SPECIFIC BASIS.
2. SETTING BLOCK DUROMETER HARDNESS OF 70-90 (SHORE A) AS REFERENCED IN FBC CHAPTER 24.
3. TWO APPROVED SETTING BLOCKS SHALL BE USED FOR GLASS WIDER THAN 36" AS PER FBC CHAPTER 24.
4. D.L.O. AND DESIGN PRESSURES MAY NOT EXCEED MAX VALUES IN DP TABLE, AND ELEVATIONS ON SHEETS 3-5.
5. GLAZING DETAILS SHOWN WITHOUT GLAZING BEADS HAVE PASSED TESTING WITHOUT GLAZING BEADS AND MAY BE USED WITH ANY COMPATIBLE GLAZING BEADS THAT THE MANUFACTURER OFFERS.

DESIGN PRESSURE TABLE NOTES:

1. GLAZING TYPES SHALL BE LIMITED TO THE MAXIMUM PANEL SIZES SHOWN IN THE TABLE WHEN NO KICK PANEL IS USED.
2. KICK PANELS MAY BE USED WITH ANY GLAZING TYPES SHOWN.
3. WHEN THE KICKPANEL IS USED WITH GLAZING TYPE G1, THE PANEL HEIGHT SHOWN FOR G1 MAY BE ADDED TO THE PANEL HEIGHT SHOWN FOR THE KICKPANEL TO DETERMINE THE OVERALL PANEL HEIGHT.
4. WHEN THE KICKPANEL IS USED WITH GLAZING TYPES G2, G3 OR G4, THE OVERALL PANEL HEIGHT SHALL NOT EXCEED THE ALLOWABLE PANEL HEIGHTS PRESENTED IN THE GLAZING TABLE (THE HEIGHTS SHALL NOT BE ADDED).

REILLY ARCHITECTURAL

REILLY ARCHITECTURAL
901 BURMAN BLVD. BUILDING 701
CALVERTON, NEW YORK 11933
PH: (631)208-0710 FAX: (631)201-0711

TITLE: *RWD45 WOOD LIFT & SLIDE DOOR (HVHZ) (IMPACT)*

GLAZING DETAILS & DESIGN PRESSURE TABLE

PREPARED BY: BUILDING DROPS, INC.
1900 NE MIAMI CT. SUITE 2-15
MIAMI, FL 33132
PH: (954)399-8478
FAX: (954)744.4738
WEB: www.buildingdrops.com

REMARKS	BY	DATE
FRAME SIZE NOTE	SM	2/20/24

THE INSTALLATION DETAILS DESCRIBED HEREIN ARE GENERIC AND MAY NOT REFLECT ACTUAL CONDITIONS FOR A SPECIFIC SITE. IF SITE CONDITIONS CAUSE INSTALLATION TO DEVIATE FROM THE REQUIREMENTS DETAILED HEREIN, A LICENSED ENGINEER OR ARCHITECT SHALL PREPARE SITE SPECIFIC DOCUMENTS FOR USE WITH THIS DOCUMENT.

HERMES F. NORERO
LICENSE
No. 73778
STATE OF FLORIDA
PROFESSIONAL ENGINEER

HERMES F. NORERO
LICENSE NO. 73778
1900 NE MIAMI CT. SUITE 2-15
MIAMI, FL 33132
FBPE CERT. OF AUTHORIZATION NO. 29578

FL46083

DATE: 09.26.2023

DWG. BY: MG

CHK. BY: HFN

SCALE: NTS

DWG. #: RWD007

SHEET: 2 OF 13

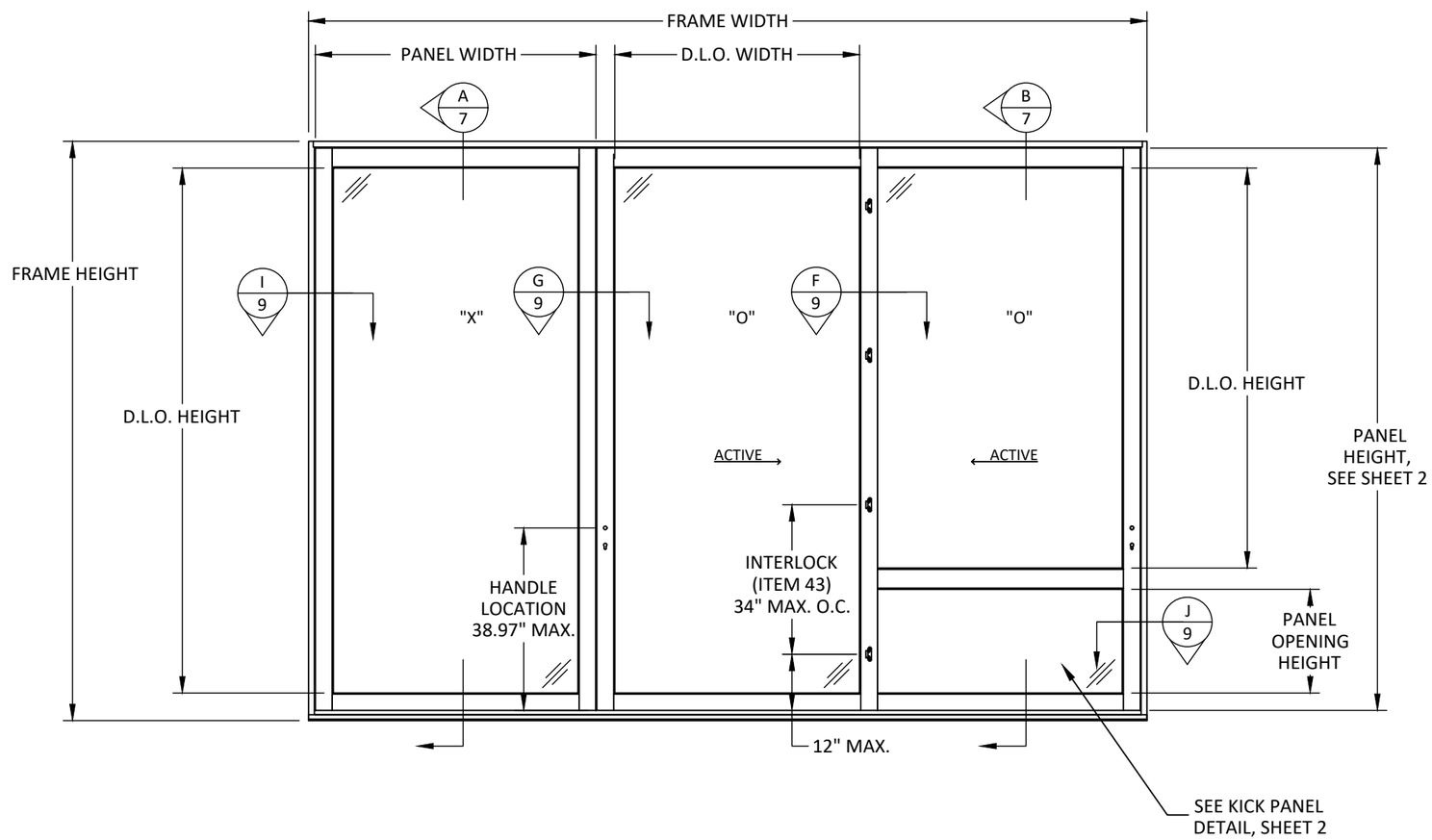

ELEVATION

2 - TRACK
X-OO CONFIGURATION

SIZE NOTES:
D.L.O. WIDTH = PANEL WIDTH - 7.69"
FIXED PANEL D.L.O. HEIGHT = FIXED PANEL HEIGHT - 8.00"
OPERABLE PANEL D.L.O. HEIGHT = OPERABLE PANEL HEIGHT - 7.62"

MAX. ALLOWABLE FRAME WIDTH = 343.375"
MAX. ALLOWABLE FRAME HEIGHT = 123.875"
ABOVE MAX. SIZES DO NOT OCCUR SIMULTANEOUSLY, SEE SHEET 2 FOR APPROVED PANEL SIZES

APPROVED CONFIGURATIONS INCLUDE:
1 TRACK - X
2 TRACK - OO-OO, XO-OX, XO-OO, OO-XO, OO, XO, OX, XO-O, XOX, X-X
3 TRACK - OOO, OOX, XOO, OO-OO, XO-OO, OO-OX

DESIGNATIONS "X" AND "O" STAND FOR THE FOLLOWING:
X: FIXED PANEL
O: OPERABLE PANEL

REILLY ARCHITECTURAL
901 BURMAN BLVD. BUILDING 701
CALVERTON, NEW YORK 11933
PH: (631)208-0710 FAX: (631)201-0711

TITLE: *RWD45 WOOD LIFT & SLIDE DOOR (HVHZ) (IMPACT)*

ELEVATION 2 - TRACK

PREPARED BY: BUILDING DROPS, INC.
1900 NE MIAMI CT. SUITE 2-15
MIAMI, FL 33132
PH: (954)399-8478
FAX: (954)744.4738
WEB: www.buildingdrops.com

REMARKS	BY	DATE
FRAME SIZE NOTE	SM	2/20/24

THE INSTALLATION DETAILS DESCRIBED HEREIN ARE GENERIC AND MAY NOT REFLECT ACTUAL CONDITIONS FOR A SPECIFIC SITE. IF SITE CONDITIONS CAUSE INSTALLATION TO DEVIATE FROM THE REQUIREMENTS DETAILED HEREIN, A LICENSED ENGINEER OR ARCHITECT SHALL PREPARE SITE SPECIFIC DOCUMENTS FOR USE WITH THIS DOCUMENT.

HERMES F. NORERO
LICENSE
No. 73778
STATE OF
FLORIDA
PROFESSIONAL ENGINEER

HERMES F. NORERO
FLORIDA LIC. NO. 73778
1900 NE MIAMI CT. SUITE 2-15
MIAMI, FL 33132
FBPE CERT. OF AUTHORIZATION NO. 29578

FL46083

DATE: 09.26.2023

DWG. BY: MG
CHK. BY: HFN

SCALE: NTS

DWG. #: RWD007

SHEET: 3 OF 13

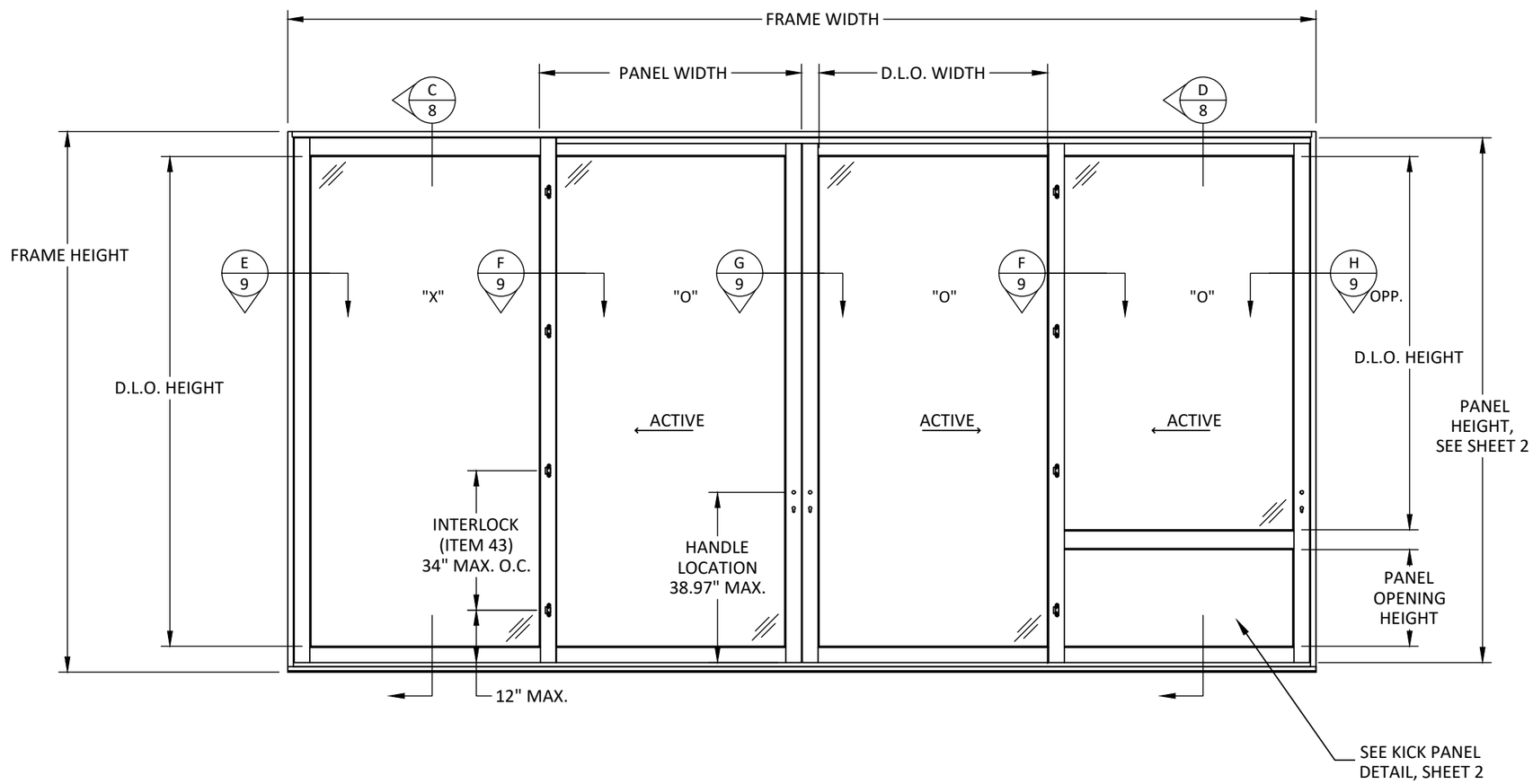

ELEVATION

3 - TRACK

XO-OO CONFIGURATION

SIZE NOTES:
D.L.O. WIDTH = PANEL WIDTH - 7.69"
FIXED PANEL D.L.O. HEIGHT = FIXED PANEL HEIGHT - 8.00"
OPERABLE PANEL D.L.O. HEIGHT = OPERABLE PANEL HEIGHT - 7.62"

MAX. ALLOWABLE FRAME WIDTH = 343.375"
MAX. ALLOWABLE FRAME HEIGHT = 147.625"
ABOVE MAX. SIZES DO NOT OCCUR SIMULTANEOUSLY, SEE SHEET 2 FOR APPROVED PANEL SIZES

APPROVED CONFIGURATIONS INCLUDE:
1 TRACK - X
2 TRACK - OO-OO, XO-OX, XO-OO, OO-XO, OO, XO, OX, XO-O, XOX, X-X
3 TRACK - OOO, OOX, XOO, OO-OO, XO-OO, OO-OX

DESIGNATIONS "X" AND "O" STAND FOR THE FOLLOWING:
X: FIXED PANEL
O: OPERABLE PANEL

REILLY
ARCHITECTURAL

REILLY ARCHITECTURAL
901 BURMAN BLVD. BUILDING 701
CALVERTON, NEW YORK 11933
PH: (631)208-0710 FAX: (631)201-0711

TITLE: *RWD45 WOOD LIFT & SLIDE DOOR (HVHZ) (IMPACT)*

ELEVATION 3 - TRACK

PREPARED BY: BUILDING DROPS, INC.
1900 NE MIAMI CT. SUITE 2-15
MIAMI, FL 33132
PH: (954)399-8478
FAX: (954)744.4738
WEB: www.buildingdrops.com

REMARKS	BY	DATE
FRAME SIZE NOTE	SM	2/20/24

THE INSTALLATION DETAILS DESCRIBED HEREIN ARE GENERIC AND MAY NOT REFLECT ACTUAL CONDITIONS FOR A SPECIFIC SITE. IF SITE CONDITIONS CAUSE INSTALLATION TO DEVIATE FROM THE REQUIREMENTS DETAILED HEREIN, A LICENSED ENGINEER OR ARCHITECT SHALL PREPARE SITE SPECIFIC DOCUMENTS FOR USE WITH THIS DOCUMENT.

HERMES F. NORERO
LICENSE
No. 73778
STATE OF
FLORIDA
PROFESSIONAL ENGINEER

HERMES F. NORERO
FL LICENSE NO. 73778
1900 NE MIAMI CT. SUITE 2-15
MIAMI, FL 33132
FBPE CERT. OF AUTHORIZATION NO. 29578

FL46083

DATE: 09.26.2023

DWG. BY: MG

CHK. BY: HFN

SCALE: NTS

DWG. #: RWD007

SHEET: 4 OF 13

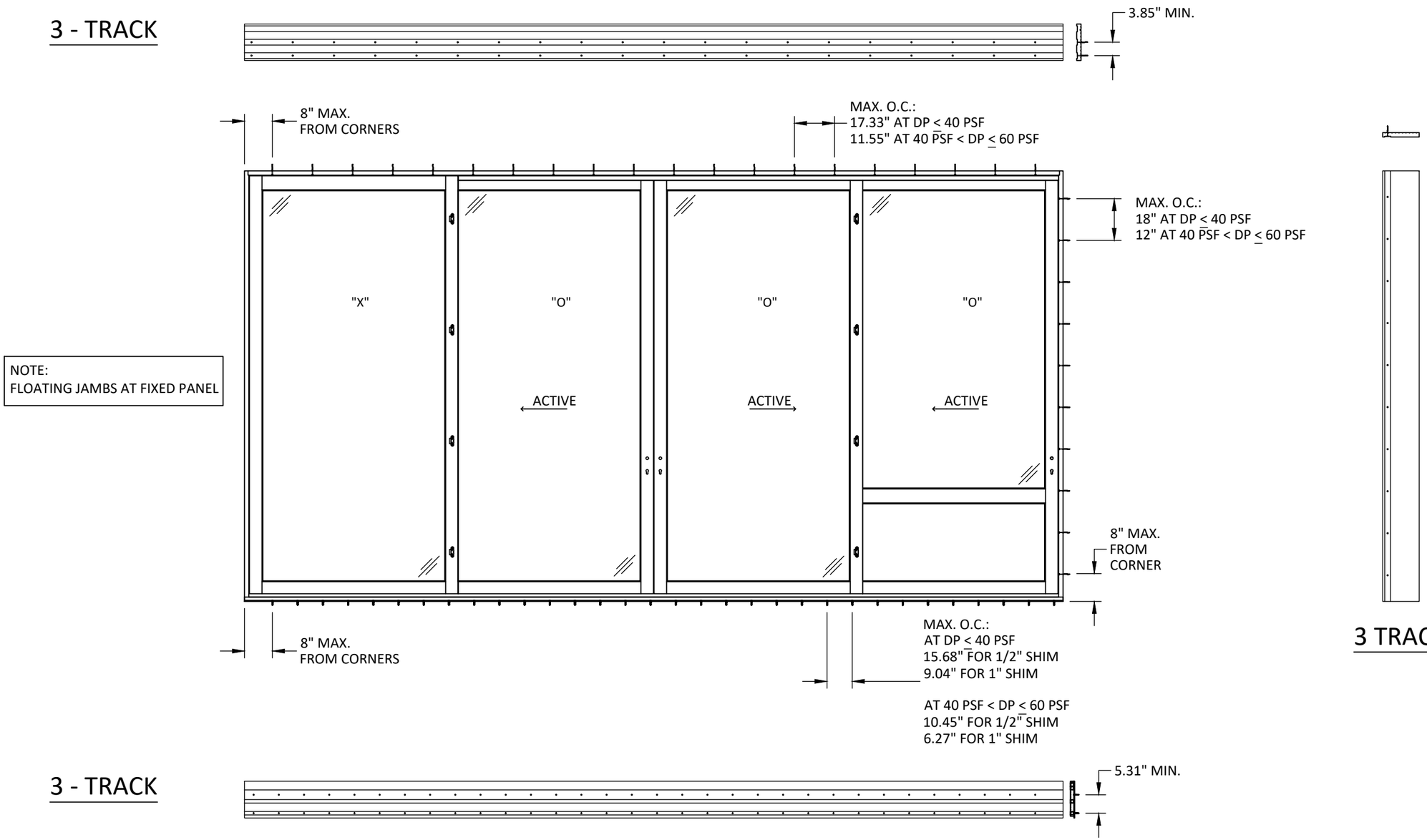

ANCHOR LAYOUT

XO-OO CONFIGURATION
FLOATING JAMB
THROUGH FRAME INSTALLATION

REILLY ARCHITECTURAL

REILLY ARCHITECTURAL
901 BURMAN BLVD. BUILDING 701
CALVERTON, NEW YORK 11933
PH: (631)208-0710 FAX: (631)201-0711

TITLE: *RWD45 WOOD LIFT & SLIDE DOOR (HVHZ) (IMPACT)*

ANCHOR LAYOUT

PREPARED BY: BUILDING DROPS, INC.
1900 NE MIAMI CT. SUITE 2-15
MIAMI, FL 33132
PH: (954)399-8478
FAX: (954)744.4738
WEB: www.buildingdrops.com

REMARKS	BY	DATE
FRAME SIZE NOTE	SM	2/20/24

THE INSTALLATION DETAILS DESCRIBED HEREIN ARE GENERIC AND MAY NOT REFLECT ACTUAL CONDITIONS FOR A SPECIFIC SITE. IF SITE CONDITIONS CAUSE INSTALLATION TO DEVIATE FROM THE REQUIREMENTS DETAILED HEREIN, A LICENSED ENGINEER OR ARCHITECT SHALL PREPARE SITE SPECIFIC DOCUMENTS FOR USE WITH THIS DOCUMENT.

HERMES F. NORERO
LICENSE
No. 73778
STATE OF
FLORIDA
PROFESSIONAL ENGINEER

HERMES F. NORERO
FL LICENSE NO. 73778
1900 NE MIAMI CT. SUITE 2-15
MIAMI, FL 33132
FBPE CERT. OF AUTHORIZATION NO. 29578

FL46083

DATE: 09.26.2023

DWG. BY: MG

CHK. BY: HFN

SCALE: NTS

DWG. #: RWD007

SHEET: 5 OF 13

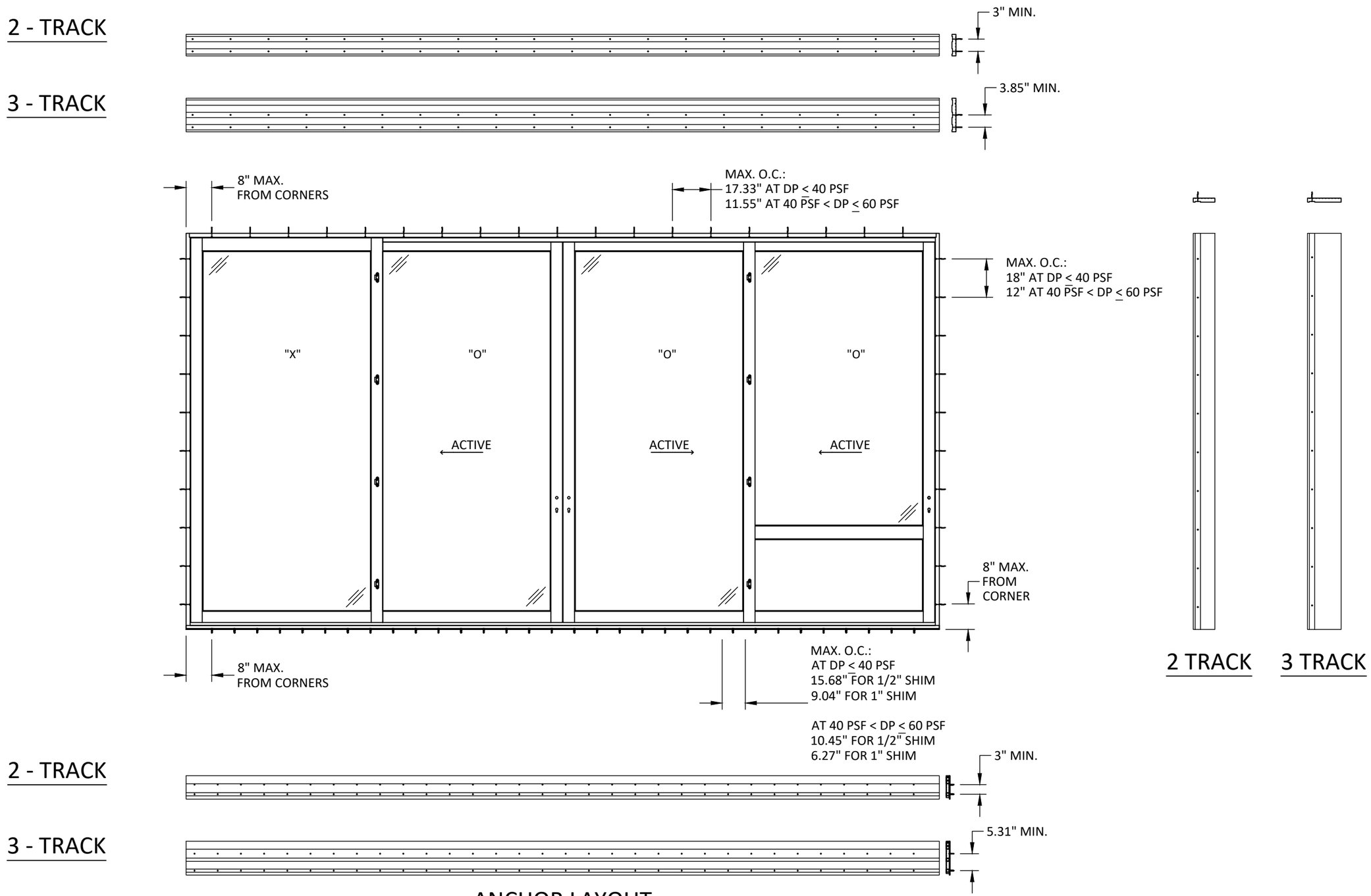

ANCHOR LAYOUT

XO-OO CONFIGURATION
SECURED JAMB
THROUGH FRAME INSTALLATION

REILLY ARCHITECTURAL

REILLY ARCHITECTURAL
901 BURMAN BLVD. BUILDING 701
CALVERTON, NEW YORK 11933
PH: (631)208-0710 FAX: (631)201-0711

TITLE: *RWD45 WOOD LIFT & SLIDE DOOR (HVHZ) (IMPACT)*

ANCHOR LAYOUT

PREPARED BY: BUILDING DROPS, INC.
1900 NE MIAMI CT. SUITE 2-15
MIAMI, FL 33132
PH: (954)399-8478
FAX: (954)744.4738
WEB: www.buildingdrops.com

REMARKS	BY	DATE
FRAME SIZE NOTE	SM	2/20/24

THE INSTALLATION DETAILS DESCRIBED HEREIN ARE GENERIC AND MAY NOT REFLECT ACTUAL CONDITIONS FOR A SPECIFIC SITE. IF SITE CONDITIONS CAUSE INSTALLATION TO DEVIATE FROM THE REQUIREMENTS DETAILED HEREIN, A LICENSED ENGINEER OR ARCHITECT SHALL PREPARE SITE SPECIFIC DOCUMENTS FOR USE WITH THIS DOCUMENT.

HERMES F. NORERO
LICENSE
No. 73778
STATE OF
FLORIDA
PROFESSIONAL ENGINEER

HERMES F. NORERO
LICENSE NO. 73778
1900 NE MIAMI CT. SUITE 2-15
MIAMI, FL 33132
FBPE CERT. OF AUTHORIZATION NO. 29578

FL46083

DATE: 09.26.2023

DWG. BY: MG

CHK. BY: HFN

SCALE: NTS

DWG. #: RWD007

SHEET: 6 OF 13

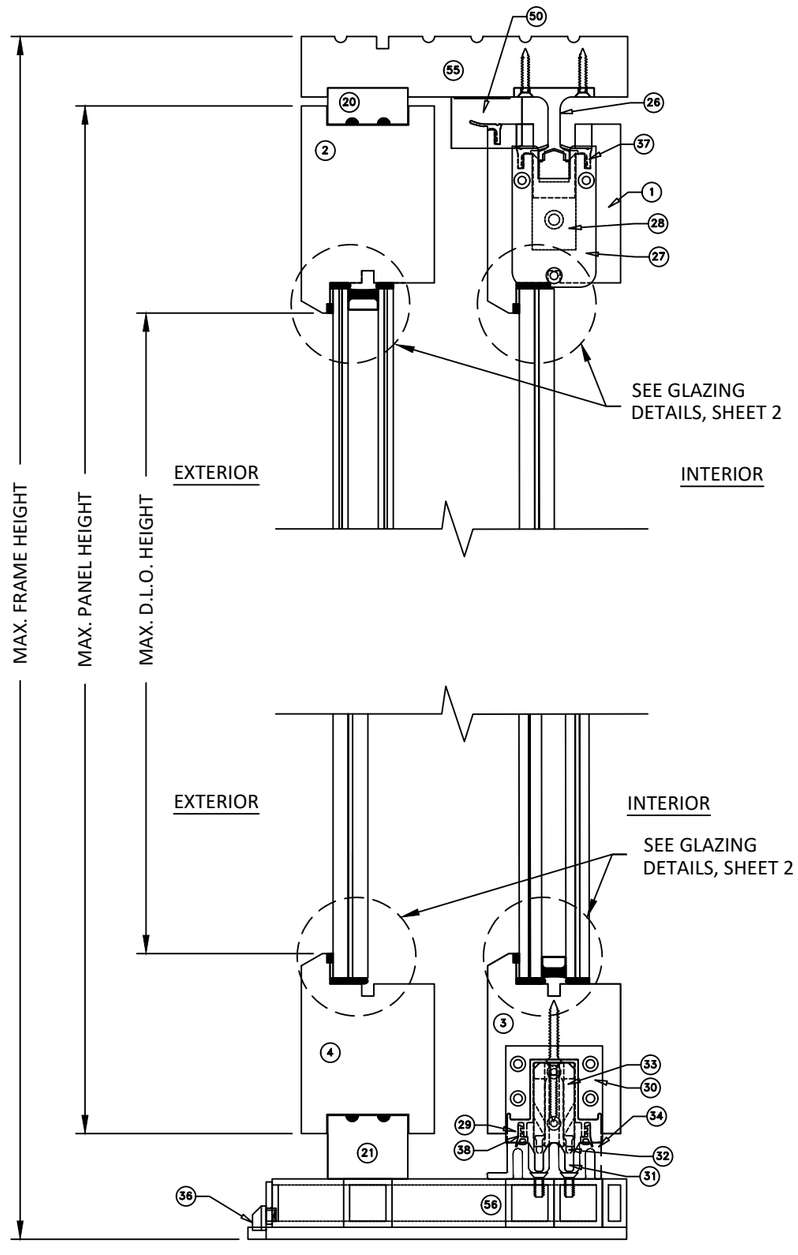

A/7 VERTICAL SECTION

HEAD & SILL
2 - TRACK

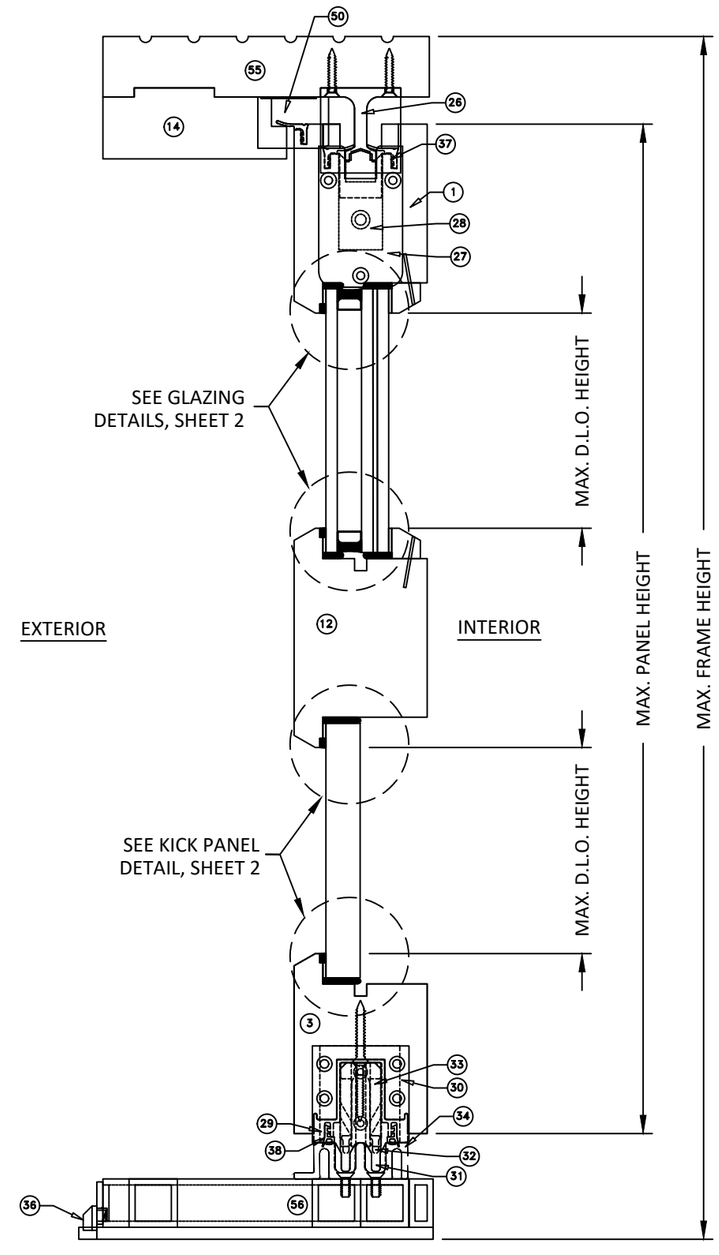

B/7 VERTICAL SECTION

HEAD & SILL
2 - TRACK WITH LOCK RAIL

REILLY ARCHITECTURAL

REILLY ARCHITECTURAL
901 BURMAN BLVD. BUILDING 701
CALVERTON, NEW YORK 11933
PH: (631)208-0710 FAX: (631)201-0711

TITLE: *RWD45 WOOD LIFT & SLIDE DOOR (HVHZ) (IMPACT)*

VERTICAL SECTIONS

PREPARED BY: BUILDING DROPS, INC.
1900 NE MIAMI CT. SUITE 2-15
MIAMI, FL 33132
PH: (954)399-8478
FAX: (954)744.4738
WEB: www.buildingdrops.com

REMARKS	BY	DATE
FRAME SIZE NOTE	SM	2/20/24

THE INSTALLATION DETAILS DESCRIBED HEREIN ARE GENERIC AND MAY NOT REFLECT ACTUAL CONDITIONS FOR A SPECIFIC SITE. IF SITE CONDITIONS CAUSE INSTALLATION TO DEVIATE FROM THE REQUIREMENTS DETAILED HEREIN, A LICENSED ENGINEER OR ARCHITECT SHALL PREPARE SITE SPECIFIC DOCUMENTS FOR USE WITH THIS DOCUMENT.

HERMES F. NORERO
LICENSE
No. 73778
STATE OF
FLORIDA
PROFESSIONAL ENGINEER

HERMES F. NORERO
FLORIDA LICENSE NO. 73778
1900 NE MIAMI CT. SUITE 2-15
MIAMI, FL 33132
FBPE CERT. OF AUTHORIZATION NO. 29578

FL46083

DATE: 09.26.2023

DWG. BY: MG

CHK. BY: HFN

SCALE: NTS

DWG. #: RWD007

SHEET: 7 OF 13

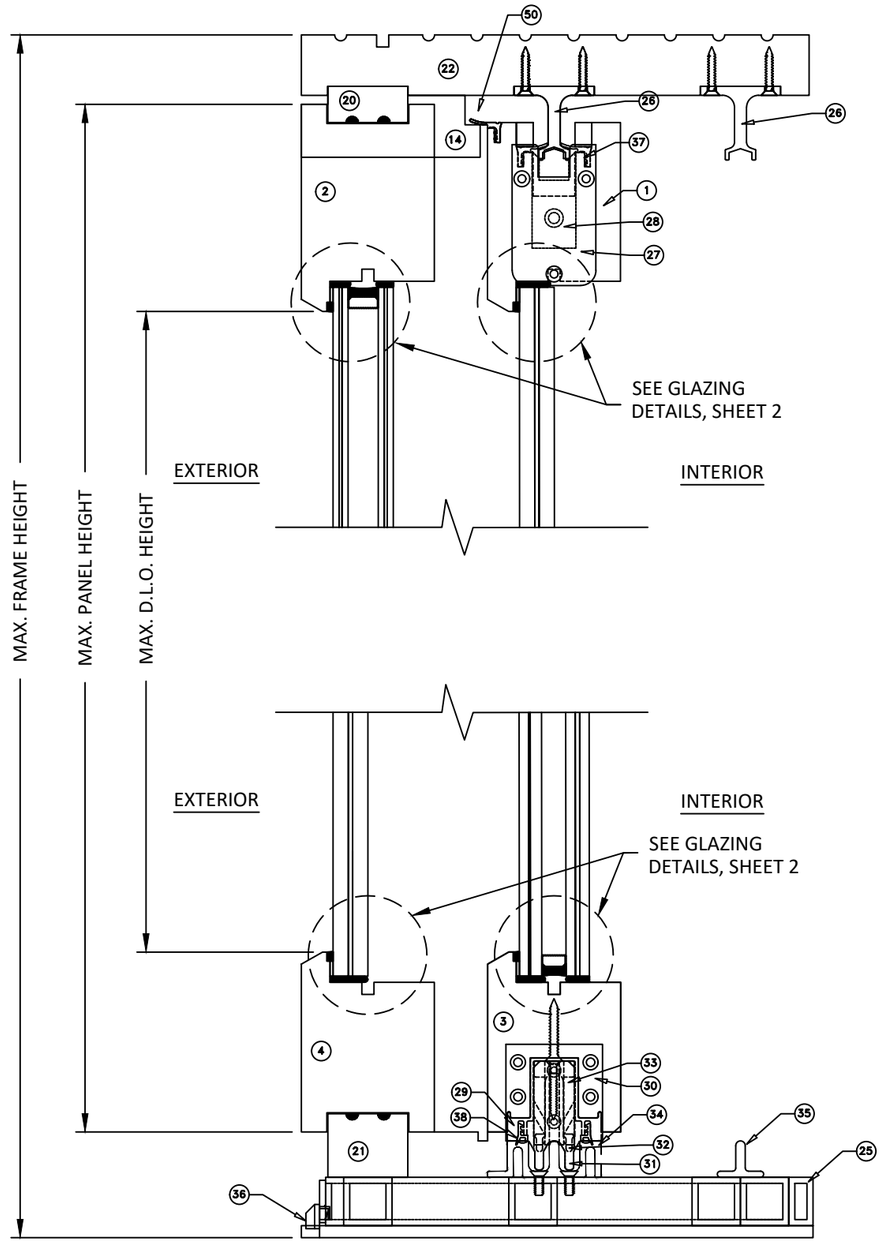

C/8 VERTICAL SECTION

HEAD & SILL
3 - TRACK

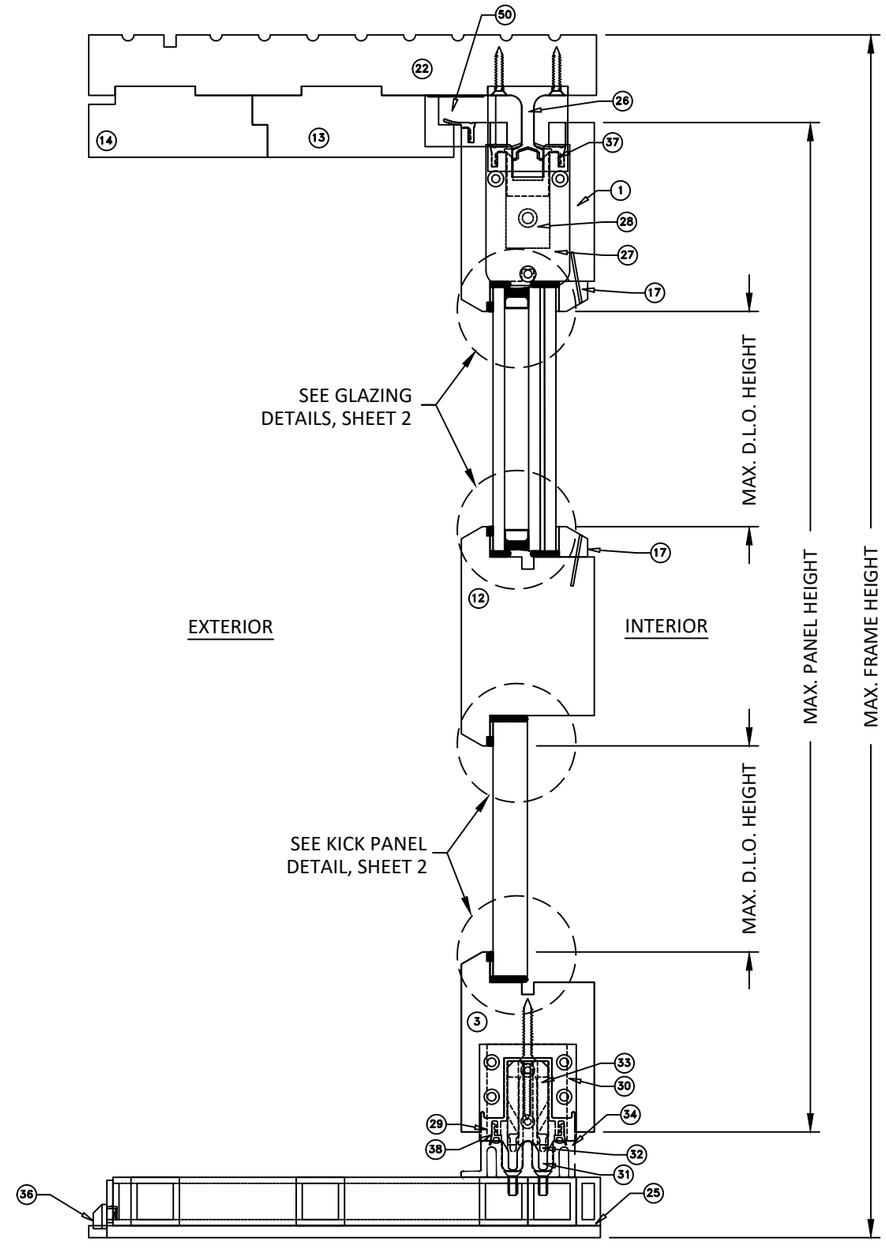

D/8 VERTICAL SECTION

HEAD & SILL
3 - TRACK WITH LOCK RAIL

REILLY ARCHITECTURAL

REILLY ARCHITECTURAL
901 BURMAN BLVD. BUILDING 701
CALVERTON, NEW YORK 11933
PH: (631)208-0710 FAX: (631)201-0711

TITLE: *RWD45 WOOD LIFT & SLIDE DOOR (HVHZ) (IMPACT)*

VERTICAL SECTIONS

PREPARED BY: BUILDING DROPS, INC.
1900 NE MIAMI CT. SUITE 2-15
MIAMI, FL 33132
PH: (954)399-8478
FAX: (954)744.4738
WEB: www.buildingdrops.com

REMARKS	BY	DATE
FRAME SIZE NOTE	SM	2/20/24

THE INSTALLATION DETAILS DESCRIBED HEREIN ARE GENERIC AND MAY NOT REFLECT ACTUAL CONDITIONS FOR A SPECIFIC SITE. IF SITE CONDITIONS CAUSE INSTALLATION TO DEVIATE FROM THE REQUIREMENTS DETAILED HEREIN, A LICENSED ENGINEER OR ARCHITECT SHALL PREPARE SITE SPECIFIC DOCUMENTS FOR USE WITH THIS DOCUMENT.

HERMES F. NORERO
LICENSE
No. 73778
STATE OF FLORIDA
PROFESSIONAL ENGINEER
HERMES F. NORERO
FLORIDA LICENSE NO. 73778
1900 NE MIAMI CT. SUITE 2-15
MIAMI, FL 33132
FBPE CERT. OF AUTHORIZATION NO. 29578

FL46083

DATE: 09.26.2023

DWG. BY: MG | CHK. BY: HFN

SCALE: NTS

DWG. #: RWD007

SHEET: 8 OF 13

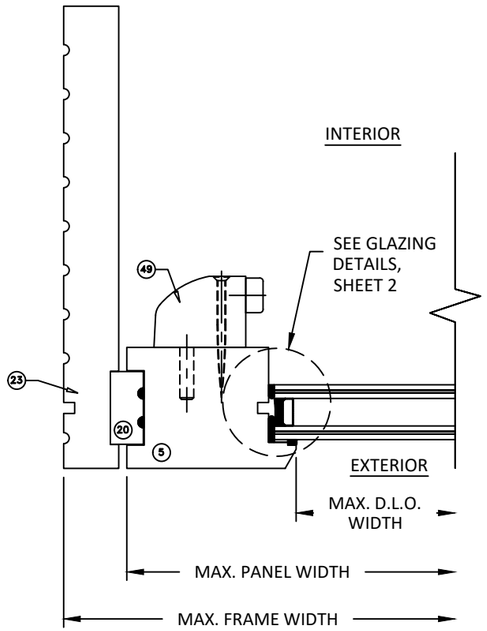

E/9 HORIZONTAL SECTION
JAMB - FIXED PANEL
3-TRACK

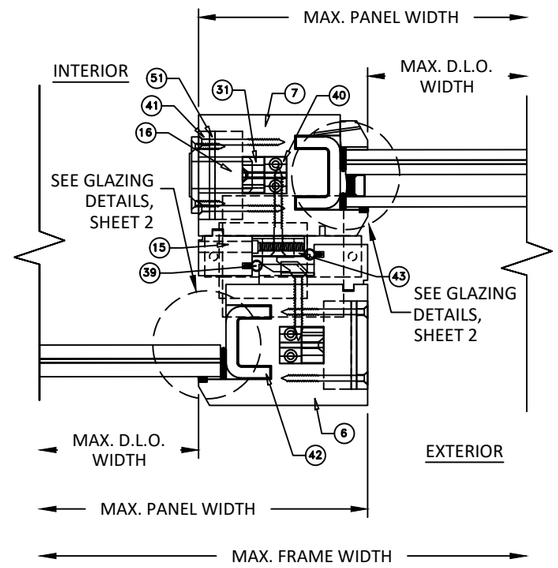

F/9 HORIZONTAL SECTION
INTERLOCK

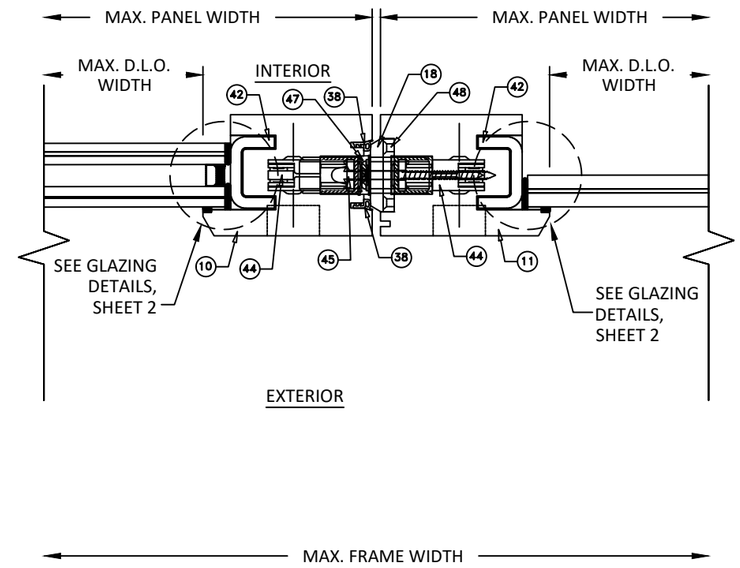

G/9 HORIZONTAL SECTION
MEETING STILE

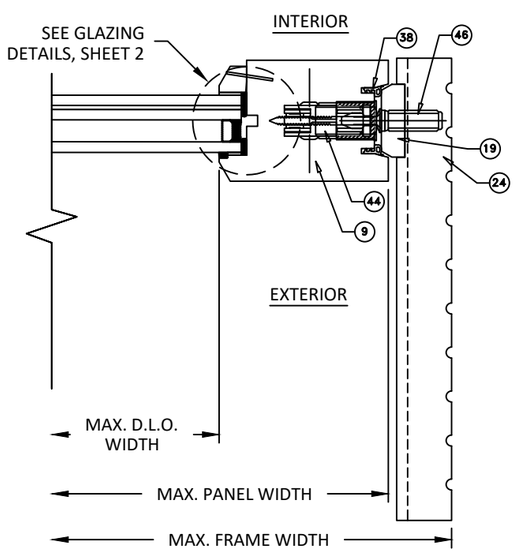

H/9 HORIZONTAL SECTION
JAMB - OPERABLE PANEL
3-TRACK

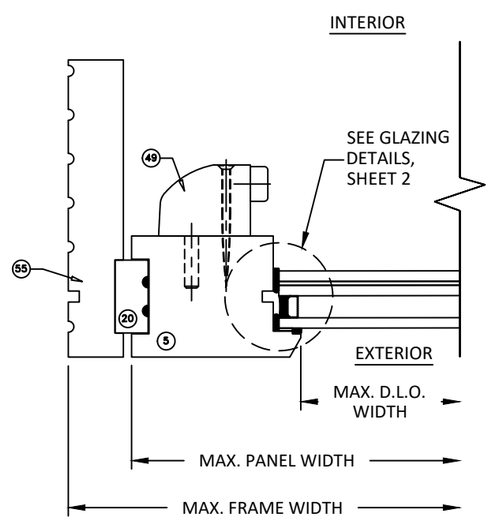

I/9 HORIZONTAL SECTION
JAMB - FIXED PANEL
2 - TRACK

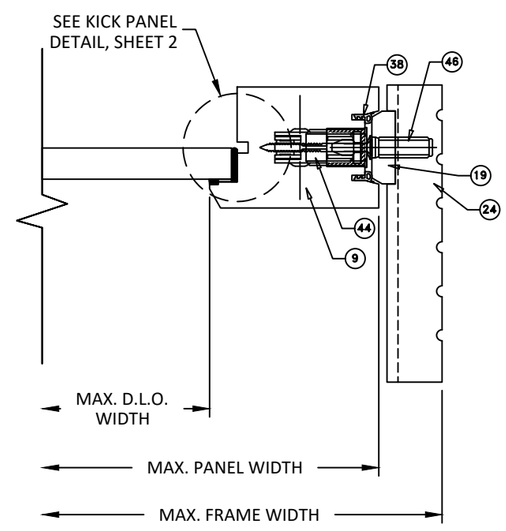

J/9 HORIZONTAL SECTION
JAMB - OPERABLE PANEL
2 - TRACK

REILLY ARCHITECTURAL
REILLY ARCHITECTURAL
901 BURMAN BLVD. BUILDING 701
CALVERTON, NEW YORK 11933
PH: (631)208-0710 FAX: (631)201-0711

TITLE: *RWD45 WOOD LIFT & SLIDE DOOR (HVHZ) (IMPACT)*

HORIZONTAL SECTIONS

PREPARED BY: BUILDING DROPS, INC.
1900 NE MIAMI CT. SUITE 2-15
MIAMI, FL 33132
PH: (954)399-8478
FAX: (954)744.4738
WEB: www.buildingdrops.com

REMARKS	BY	DATE
FRAME SIZE NOTE	SM	2/20/24

THE INSTALLATION DETAILS DESCRIBED HEREIN ARE GENERIC AND MAY NOT REFLECT ACTUAL CONDITIONS FOR A SPECIFIC SITE. IF SITE CONDITIONS CAUSE INSTALLATION TO DEVIATE FROM THE REQUIREMENTS DETAILED HEREIN, A LICENSED ENGINEER OR ARCHITECT SHALL PREPARE SITE SPECIFIC DOCUMENTS FOR USE WITH THIS DOCUMENT.

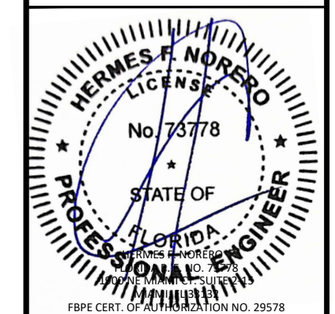

FL46083

DATE: 09.26.2023

DWG. BY: MG | CHK. BY: HFN

SCALE: NTS

DWG. #: RWD007

SHEET: 9 OF 13

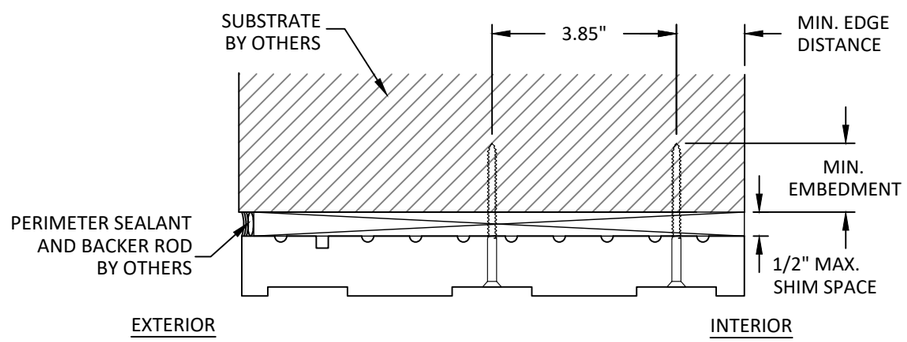

A
10

ANCHOR DETAIL

THROUGH FRAME (HEAD)
3-TRACK

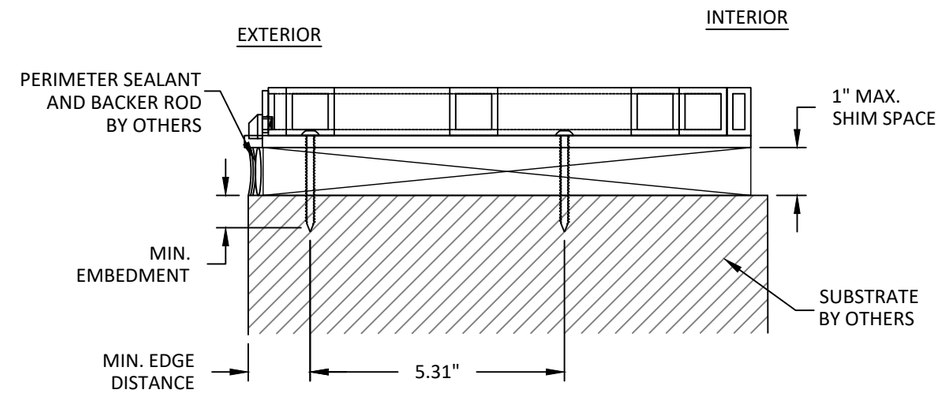

B
10

ANCHOR DETAIL

THROUGH FRAME (SILL)
3-TRACK

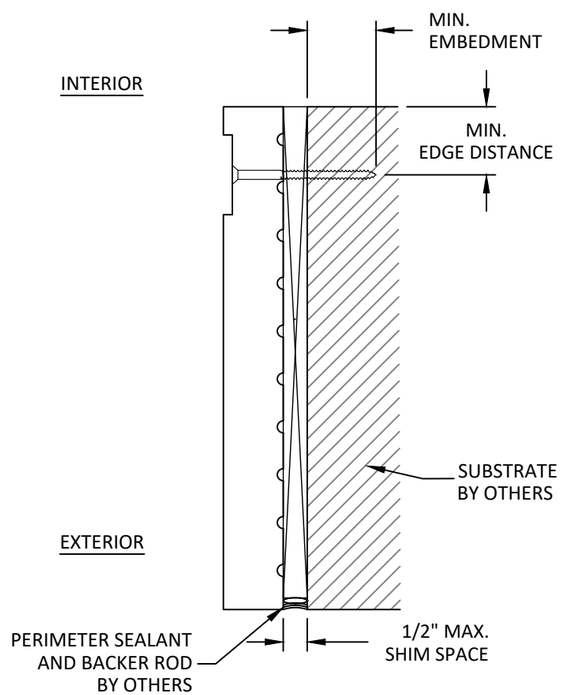

C
10

ANCHOR DETAIL

THROUGH FRAME (JAMB)
3-TRACK

ANCHOR SCHEDULE				
METHOD	SUBSTRATE	ANCHOR TYPE	MIN EMBEDMENT	MIN. EDGE DISTANCE
THROUGH FRAME HEAD AND JAMB	WOOD: MIN. SG = 0.55	#10 FLAT HEAD	1.50"	1.50"
	METAL: 18 GAUGE STEEL, MIN. Fy = 33KSI ALUMINUM .125" MIN, 6063-T5 MIN	#10 FLAT HEAD	3 THREADS MIN. PENETRATION BEYOND METAL	0.75"
	CONCRETE: f'c=3000PSI	3/16" ITW TAPCON	1.75"	1.50"
	MASONRY: CMU PER ASTM C90 MIN. 2000 PSI		1.00"	1.50"
THROUGH FRAME SILL	WOOD: MIN. SG = 0.55	#12 PAN HEAD	1.50"	1.50"
	METAL: 18 GAUGE STEEL, MIN. Fy = 33KSI ALUMINUM .125" MIN, 6063-T5 MIN	#12 PAN HEAD	3 THREADS MIN. PENETRATION BEYOND METAL	0.75"
	CONCRETE: f'c=3000PSI	1/4" ITW TAPCON	1.75"	1.50"

REILLY
ARCHITECTURAL

REILLY ARCHITECTURAL
901 BURMAN BLVD. BUILDING 701
CALVERTON, NEW YORK 11933
PH: (631)208-0710 FAX: (631)201-0711

TITLE: *RWD45 WOOD LIFT & SLIDE DOOR (HVHZ) (IMPACT)*

ANCHOR DETAILS & ANCHOR SCHEDULE

PREPARED BY: BUILDING DROPS, INC.
1900 NE MIAMI CT. SUITE 2-15
MIAMI, FL 33132
PH: (954)399-8478
FAX: (954)744.4738
WEB: www.buildingdrops.com
BUILDING DROPS

REMARKS	BY	DATE
FRAME SIZE NOTE	SM	2/20/24

THE INSTALLATION DETAILS DESCRIBED HEREIN ARE GENERIC AND MAY NOT REFLECT ACTUAL CONDITIONS FOR A SPECIFIC SITE. IF SITE CONDITIONS CAUSE INSTALLATION TO DEVIATE FROM THE REQUIREMENTS DETAILED HEREIN, A LICENSED ENGINEER OR ARCHITECT SHALL PREPARE SITE SPECIFIC DOCUMENTS FOR USE WITH THIS DOCUMENT.

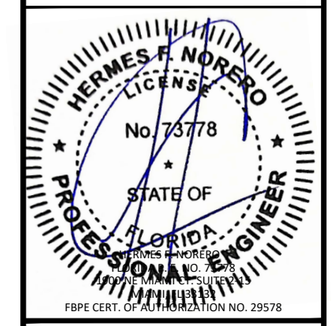

FL46083

DATE: 09.26.2023

DWG. BY: MG

CHK. BY: HFN

SCALE: NTS

DWG. #: RWD007

SHEET: 10 OF 13

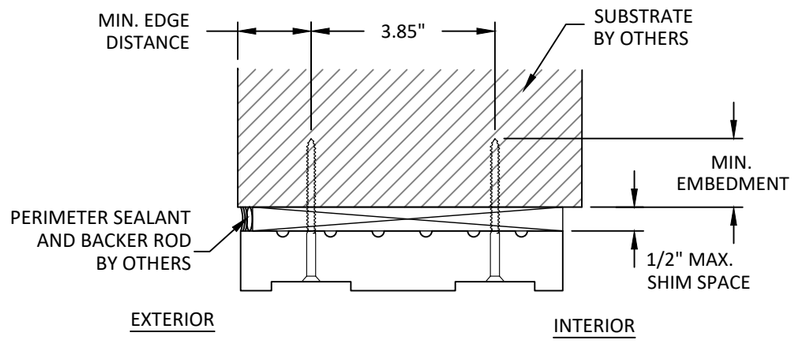

D/10 ANCHOR DETAIL
THROUGH FRAME (HEAD)
2-TRACK

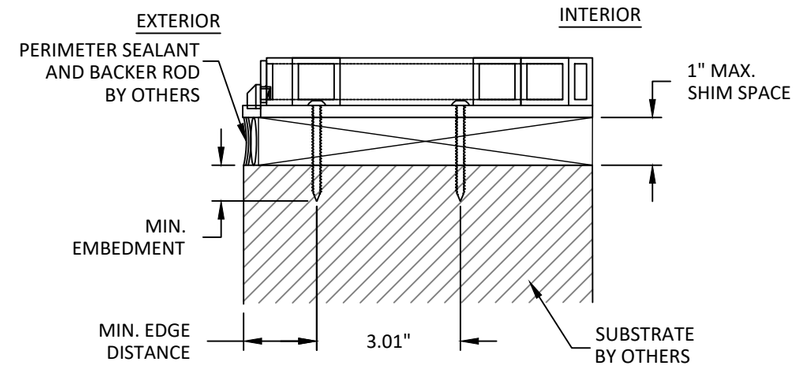

E/11 ANCHOR DETAIL
THROUGH FRAME (SILL)
2-TRACK

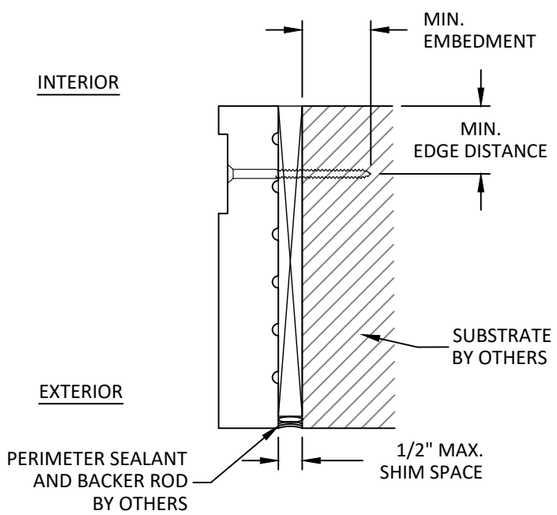

F/11 ANCHOR DETAIL
THROUGH FRAME (JAMB)
2-TRACK

ANCHOR SCHEDULE

METHOD	SUBSTRATE	ANCHOR TYPE	MIN EMBEDMENT	MIN. EDGE DISTANCE
THROUGH FRAME HEAD AND JAMB	WOOD: MIN. SG = 0.55	#10 FLAT HEAD	1.50"	1.50"
	METAL: 18 GAUGE STEEL, MIN. Fy = 33KSI ALUMINUM .125" MIN, 6063-T5 MIN	#10 FLAT HEAD	3 THREADS MIN. PENETRATION BEYOND METAL	0.75"
	CONCRETE: f'c=3000PSI	3/16" ITW TAPCON	1.75"	1.50"
	MASONRY: CMU PER ASTM C90 MIN. 2000 PSI		1.00"	1.50"
THROUGH FRAME SILL	WOOD: MIN. SG = 0.55	#12 PAN HEAD	1.50"	1.50"
	METAL: 18 GAUGE STEEL, MIN. Fy = 33KSI ALUMINUM .125" MIN, 6063-T5 MIN	#12 PAN HEAD	3 THREADS MIN. PENETRATION BEYOND METAL	0.75"
	CONCRETE: f'c=3000PSI	1/4" ITW TAPCON	1.75"	1.50"

REILLY ARCHITECTURAL
REILLY ARCHITECTURAL
901 BURMAN BLVD. BUILDING 701
CALVERTON, NEW YORK 11933
PH: (631)208-0710 FAX: (631)201-0711

TITLE: *RWD45 WOOD LIFT & SLIDE DOOR (HVHZ) (IMPACT)*

ANCHOR DETAILS CONTINUED

PREPARED BY: BUILDING DROPS, INC.
1900 NE MIAMI CT. SUITE 2-15
MIAMI, FL 33132
PH: (954)399-8478
FAX: (954)744.4738
WEB: www.buildingdrops.com

REMARKS	BY	DATE
FRAME SIZE NOTE	SM	2/20/24

THE INSTALLATION DETAILS DESCRIBED HEREIN ARE GENERIC AND MAY NOT REFLECT ACTUAL CONDITIONS FOR A SPECIFIC SITE. IF SITE CONDITIONS CAUSE INSTALLATION TO DEVIATE FROM THE REQUIREMENTS DETAILED HEREIN, A LICENSED ENGINEER OR ARCHITECT SHALL PREPARE SITE SPECIFIC DOCUMENTS FOR USE WITH THIS DOCUMENT.

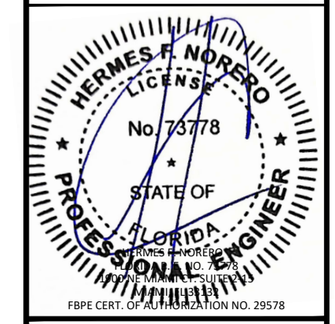

FL46083

DATE: 09.26.2023

DWG. BY: MG | CHK. BY: HFN

SCALE: NTS

DWG. #: RWD007

SHEET: 11 OF 13

ITEM #	MANUFACTURER	MODEL / PN	QTY PER UNIT	MATERIAL	DESCRIPTION
1	REILLY	--	3	MAHOGANY	TOP RAIL
2	REILLY	--	1	MAHOGANY	TOP RAIL-FIXED
3	REILLY	--	3	MAHOGANY	BOTTOM RAIL
4	REILLY	--	1	MAHOGANY	BOTTOM RAIL-FIXED
5	REILLY	--	1	MAHOGANY	STILE-FIXED
6	REILLY	--	1	MAHOGANY	STILE-FIXED
7	REILLY	--	2	MAHOGANY	STILE
8	REILLY	--	1	MAHOGANY	STILE
9	REILLY	--	1	MAHOGANY	STILE
10	REILLY	--	1	MAHOGANY	STILE
11	REILLY	--	1	MAHOGANY	STILE
12	REILLY	--	1	MAHOGANY	RAIL
13	REILLY	--	1	MAHOGANY	BLOCK
14	REILLY	--	1	MAHOGANY	BLOCK
15	REILLY	--	4	MAHOGANY	INTERLOCK
16	REILLY	--	3	MAHOGANY	BLOCK
17	REILLY	--	4	MAHOGANY	GLASS STOP
18	REILLY	--	1	MAHOGANY	BLOCK
19	REILLY	--	1	MAHOGANY	BLOCK
20	REILLY	--	1	MAHOGANY	BLOCK
21	REILLY	--	2	MAHOGANY	BLOCK
22	REILLY	--	1	MAHOGANY	FRAME / HEAD - 3 TRACK
23	REILLY	--	1	MAHOGANY	JAMB - 3 TRACK
24	REILLY	--	1	MAHOGANY	JAMB - 3 TRACK
25	REILLY	--	1	ALUMINUM	SILL - 3 TRACK
26	REILLY	EA10	2	ALUMINUM	HEAD TRACK
27	FFI	LSRTG-00009	3	PLASTIC	TOP REAR GUIDE
28	FFI	LSRTG-00000	2	PLASTIC	TOP FRONT GUIDE
29	REILLY	--	3	ALUMINUM	BOTTOM RAIL EXTRUSION
30	REILLY	--	2	S.S	PLATE
31	REILLY	--	3	ALUMINUM	BLOCK
32	REILLY	--	9	ALUMINUM	CHANNEL
33	FFI	LAR 3000012	3	VARIES	ROLLER
34	REILLY	--	2	BRASS	BOTTOM TRACK
35	REILLY	--	2	BRASS	TRACK
36	VIG	1211	4	PLASTIC	WEEP
37	FFI	LSGK.TU.150	AS NEEDED	SILICONE	WEATHERSTRIP
38	FFI	G02.000.13.93	AS NEEDED	SILICONE	WEATHERSTRIP
39	RCT	WS33	AS NEEDED	SILICONE	WEATHERSTRIP
40	REILLY	--	3	ALUMINUM	BLOCK
41	REILLY	--	1	S.S	PLATE
42	VARIES	--	5	S.S	CHANNEL
43	G-U HDW	K-11864-00-0-1	8	ZINC CAST/STEEL	INLERLOCK
44	FFI	LAD255SH50	3	ALUMINUM / S.S	GEAR
45	FFI	LLB.631.11	4	S.S	LOCKING BOLT
46	FFI	LLB.4000001	4	S.S	LOCKING BOLT
47	REILLY	--	1	S.S	SASH GUIDE ACTIVE
48	REILLY	--	1	S.S	SASH GUIDE INACTIVE
49	REILLY	--	3	ALUMINUM	BLOCK
50	G-U HDW	G00728-00-30	2	FOAM	INSULATION STRIP
51	MCMASTER	3449N129	3	FOAM	BLOCK
52	VARIES	VARIES	2	S.S	SILL LEG PLATE
53	REILLY	--	1	MAHOGANY	JAMB - 2 TRACK
54	REILLY	--	1	MAHOGANY	JAMB - 2 TRACK
55	REILLY	--	1	MAHOGANY	FRAME / HEAD - 2 TRACK
56	REILLY	--	1	ALUMINUM	SILL - 2 TRACK

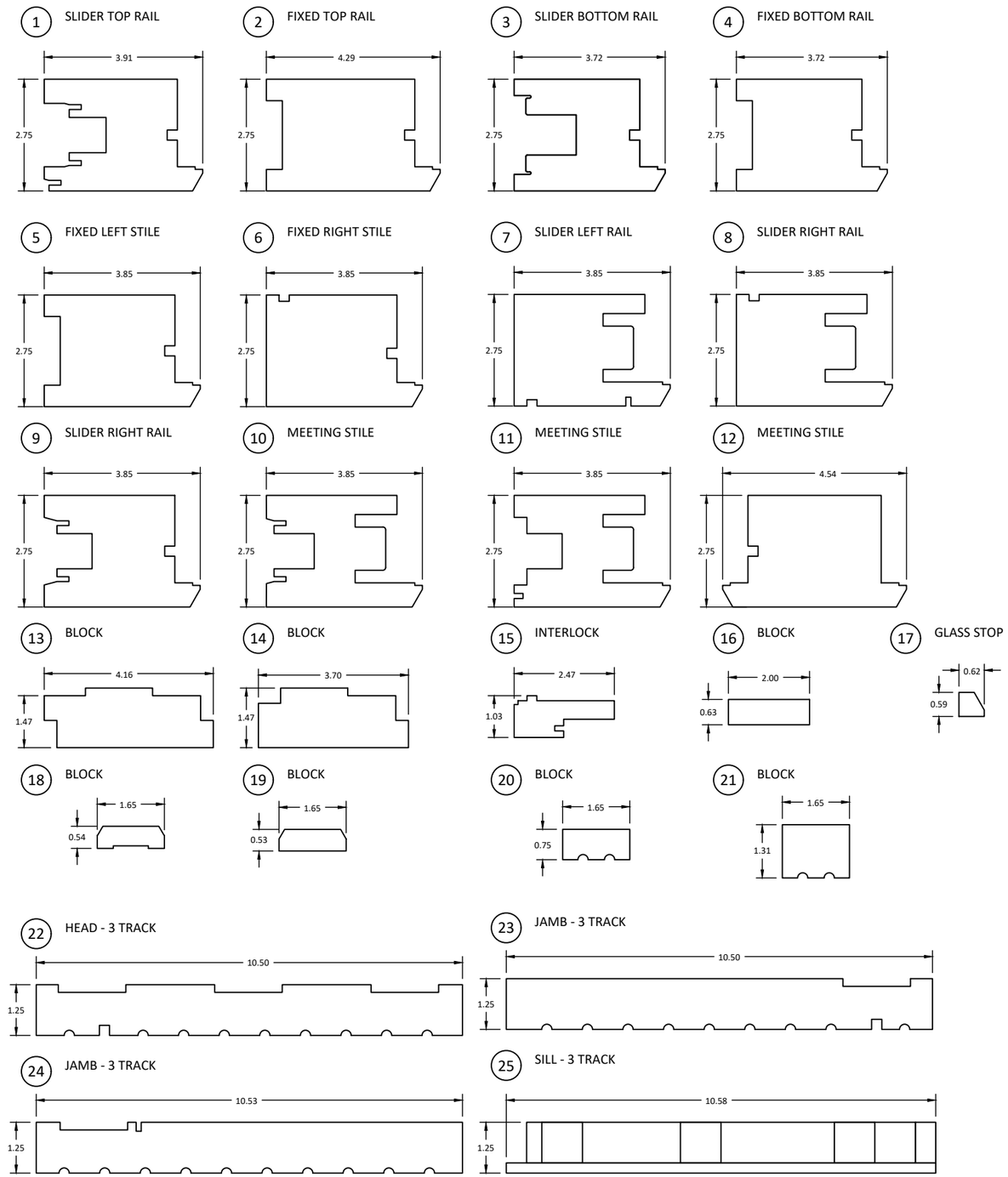

REILLY ARCHITECTURAL

REILLY ARCHITECTURAL
901 BURMAN BLVD. BUILDING 701
CALVERTON, NEW YORK 11933
PH: (631)208-0710 FAX: (631)201-0711

TITLE: *RWD45 WOOD LIFT & SLIDE DOOR (HVHZ) (IMPACT)*

COMPONENTS AND BILL OF MATERIALS

PREPARED BY: BUILDING DROPS, INC.
1900 NE MIAMI CT. SUITE 2-15
MIAMI, FL 33132
PH: (954)399-8478
FAX: (954)744.4738
WEB: www.buildingdrops.com

REMARKS	BY	DATE
FRAME SIZE NOTE	SM	2/20/24

THE INSTALLATION DETAILS DESCRIBED HEREIN ARE GENERIC AND MAY NOT REFLECT ACTUAL CONDITIONS FOR A SPECIFIC SITE. IF SITE CONDITIONS CAUSE INSTALLATION TO DEVIATE FROM THE REQUIREMENTS DETAILED HEREIN, A LICENSED ENGINEER OR ARCHITECT SHALL PREPARE SITE SPECIFIC DOCUMENTS FOR USE WITH THIS DOCUMENT.

HERMES F. NORERO LICENSE No. 73778 STATE OF FLORIDA PROFESSIONAL ENGINEER

HERMES F. NORERO
FLORIDA LICENSE NO. 73778
1900 NE MIAMI CT. SUITE 2-15
MIAMI, FL 33132
FBPE CERT. OF AUTHORIZATION NO. 29578

FL46083

DATE: 09.26.2023

DWG. BY: MG

CHK. BY: HFN

SCALE: NTS

DWG. #: RWD007

SHEET: 12 OF 13

26 HEAD TRACK

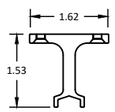

27 TOP REAR GUIDE

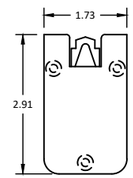

28 TOP FRONT GUIDE

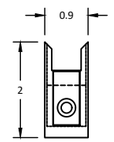

29 BOTTOM RAIL EXTRUSION

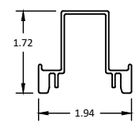

30 PLATE

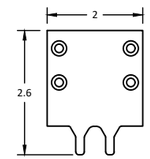

31 BLOCK

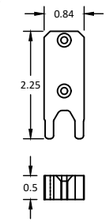

32 CHANNEL

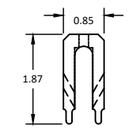

33 ROLLER

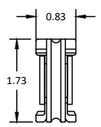

34 BOTTOM TRACK

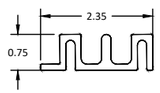

35 TRACK

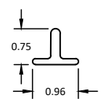

36 WEEP

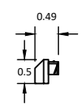

37 WEATHERSTRIP

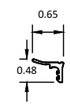

38 WEATHERSTRIP

39 WEATHERSTRIP

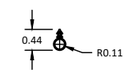

40 BLOCK

41 PLATE

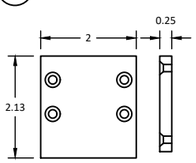

42 CHANNEL

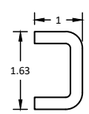

43 INTERLOCK

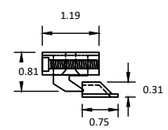

44 GEAR

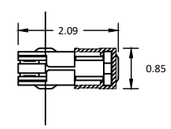

45 LOCKING BOLT

46 LOCKING BOLT

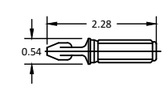

47 SASH GUIDE ACTIVE

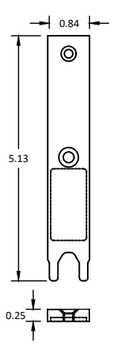

48 SASH GUIDE INACTIVE

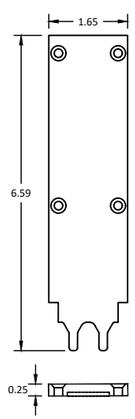

49 BLOCK

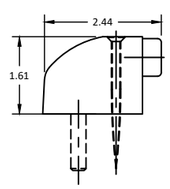

50 INSULATION STRIP

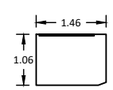

51 BLOCK

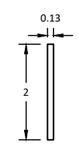

52 SILL LEG PLATE

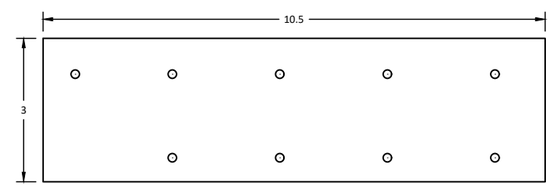

53 JAMB - 2 TRACK

54 JAMB - 2 TRACK

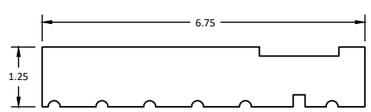

55 HEAD - 2 TRACK

56 SILL - 2 TRACK

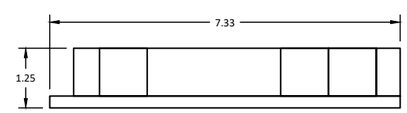

REILLY ARCHITECTURAL

REILLY ARCHITECTURAL
901 BURMAN BLVD. BUILDING 701
CALVERTON, NEW YORK 11933
PH: (631)208-0710 FAX: (631)201-0711

TITLE: *RWD45 WOOD LIFT & SLIDE DOOR (HVHZ) (IMPACT)*

COMPONENTS CONTINUED

PREPARED BY: BUILDING DROPS, INC.
1900 NE MIAMI CT. SUITE 2-15
MIAMI, FL 33132
PH: (954)399-8478
FAX: (954)744.4738
WEB: www.buildingdrops.com

REMARKS	BY	DATE
FRAME SIZE NOTE	SM	2/20/24

THE INSTALLATION DETAILS DESCRIBED HEREIN ARE GENERIC AND MAY NOT REFLECT ACTUAL CONDITIONS FOR A SPECIFIC SITE. IF SITE CONDITIONS CAUSE INSTALLATION TO DEVIATE FROM THE REQUIREMENTS DETAILED HEREIN, A LICENSED ENGINEER OR ARCHITECT SHALL PREPARE SITE SPECIFIC DOCUMENTS FOR USE WITH THIS DOCUMENT.

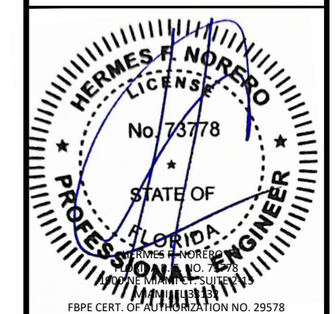

FL46083

DATE: 09.26.2023

DWG. BY: MG

CHK. BY: HFN

SCALE: NTS

DWG. #: RWD007

SHEET: 13 OF 13